Fuji Electric

NDIR GAS ANALYZER

DATA SHEET ZPA

OVERVIEW

This gas analyzer (ZPA) can measure the concentration of NO, SO_2, CO_2, CO, CH_4 and O_2 in sample gas. NO, SO_2, CO_2, CO and CH_4 are measured by non-dispersion infrared method (NDIR), while O_2 is measured by a galvanic fuel cell, paramagnetic sensor, or zirconia sensor.
Up to five components including O_2 can be measured.
ZPA also features its compact design that enables downsizing of measurement system, and simple structure with single-beam IR system that requires minimal maintenance.
ZPA is best suited to the measurement of exhaust gas from refuse incinerators, boilers, and various industrial furnaces.

FEATURES

1. **Compact and lightweight**
   H133 × W483 × D382 mm, approximate 11 kg
2. **Easy maintenance**
   Maintenance is easy due to the simple measurement unit of single-beam system adapted.
3. **User-friendly operation**
   Clear and easy-to-read display of all five gas concentrations at once.
   Simple status and maintenance messages.
4. **Extensive functions**
   Various optional functions are available such as auto calibration control, atmospheric pressure correction, high and low concentration alarms, remote range switch, and range identification signal,etc.

SPECIFICATIONS

Standard Specifications

Principle of measurement:

NO, SO_2, CO_2, CO, CH_4;
Non-dispersion infrared-ray absorption method
Single light source and single beams (single beam system)

O_2;
Galvanic fuel cell O_2 analyzer (built-in) paramagnetic O_2 analyzer (built-in), or zirconia O_2 analyzer (externally installed TYPE: ZFK7)

Measurable gas components and ranges:

	Minimum range	Maximum range
NO	0–200 ppm	0–5000 ppm
SO_2	0–200 ppm	0–10 vol%
CO_2	0–100 ppm	0–100 vol%
CO	0–200 ppm	0–100 vol%
CH_4	0–500 ppm	0–100 vol%
O_2 (Built in fuel cell)	0–10 vol%	0–25 vol%
O_2 (Built in paramagnetic)	0–5 vol%	0–100 vol%
	None	100–95 vol%
O_2 (External zirconia)	0–5 vol%	0–25 vol%

- Max. 5 components measurement including O_2.
  For reverse range O_2 measurement, infrared gas measurement is not available; only the single range O_2 measurement is available.
- Measuring ranges are changeable between the specified minimum and maximum range
- Maximum rangeability. 1:10 (except O_2)
- Up to two ranges are available for each component
- For possible combinations of components and ranges, refer to Table1.

Measured value indication:

Digital indication in 4 digits
(LCD panel with LED back light)
- Instantaneous value of each component
- Instantaneous value after O_2 correction
  (only in NO, SO_2, CO measurement with O_2)
- Average value after O_2 correction
  (only in NO, SO_2, CO measurement with O_2)
- O_2 average value

Analog output signals:

4 to 20mA DC or 0 to 1V DC, isolated internally from circuit and ground. Output lines are non-isolated each other.; 12 outputs max.
Allowable load 550Ω for 4 to 20mA DC
Allowable load 100KΩ for 0 to 1V DC
* Refer to Table2 for the channel No. of displayed values and analog output signals.

Analog input signal:

For signal input from external O_2 analyzer.
(1) Signal from Fuji's Zirconia O_2 analyzer (TYPE: ZFK7)
(2) 0 to 1V DC full-scale signal
* Input section is not isolated.
* External O_2 analyzer should be purchased separately.

Digital output (Option):

1 form C contact (24V DC/1A, resistive load) Up to 15 outputs
Instrument error, calibration error, range identification, auto calibration status, solenoid valve drive for auto calibration, high/low limit alarm
* All relay contacts are isolated mutually and from the internal circuit.

Digital input (Option):
Voltage contact (12-24V DC, ≤15mA)
Up to 9 inputs
Remote range change over, auto calibration remote start, remote hold, average value reset.
* Isolated from the internal circuit with photocoupler.

Power supply:
Voltage rating; 100V to 240V AC
Allowable range; 85V to 264V AC
Frequency; 50Hz/60Hz
Power consumption; 100VA max.

Operating conditions:
Ambient temperature; -5˚C to 45˚C
(40˚C max. when using two optical systems with 200V AC power source)
Ambient humidity; 90% RH max., non-condensing

Storage conditions:
Ambient temperature; -20˚C to 60˚C
Ambient humidity; 95% RH max., non-condensing

Dimensions (H × W × D):
133 x 483 x 382mm

Weight:
Approx. 11 kg

Finish color:
Front panel; Cool gray (PANTON 1C-F)

Enclosure:
Steel casing, for indoor use

Material of gas-contacting parts:
Gas inlet/outlet; Stainless steel 304
Sample cell; Stainless steel 304,chloroprene rubber
Infrared-ray transmitting window; CaF2
Internal piping; vinyl chloride, PTFE, Polypropylene
Paramagnetic O_2 analyzer cell: Stainless steel 316
Fuel cell O_2 analyzer cell: ABS resin

Gas inlet/outlet:
Rc1/4 or NPT1/4 internal thread

Purge gas flow rate:
1L/min (when required)

Life time of galvanic fuel cell O_2 analyzer:
2 years

Standard Functions

Output signal holding:
Enables you to hold the output signal during calibration, to the value right before the calibration is started or the user-specified value. Values indicated on LCD will not be held.

Range changeover:
You can change between ranges by manually, automatically, or remotely.
Manual: by key operation
Auto: When the measured value reaches above 90% FS of the 1st range, the range automatically switches to the 2nd range. When the measured value goes down below 80% FS of the 1st range, the range automatically switches from the 2nd range to the 1st range.
Remote: by the contact input (option).
When the specified voltage (the remote range changeover signal) is applied on the contact dedicated for each component, the 1st range is effective. When no voltage is applied, the 2nd range becomes effective.

Optional Functions

Remote output holding:
Applying the specified voltage on the dedicated terminal allows you to hold the output signal to the last value or the user-specified value. Holding is effective while the voltage is applied. Values indicated on LCD are not held.

Range identification signal:
You can check which range is in use.

Auto calibration:
This function requires standard gas cylinders for calibration and solenoid valves for opening/closing the gas flow line. When this function is activated, the analyzer opens and closes the solenoid valve driving contact periodically at preset cycle.
Auto calibration cycle setting:
1 hour to 99 hours (in increments of 1 hour) or
1 day to 40 days (in increments of 1 day).
Gas flow time setting:
The time during which calibration gas is drawn
60 seconds to 900 seconds (in increments of 1 second)

Auto calibration remote start:
When you apply the specified voltage for 1.5 seconds or longer on the auto calibration remote start contact and then open the contact, one-time auto calibration starts. Calibration gas is drawn for the time set in the "gas flow time setting" for Auto calibration (see the previous item).

Auto zero calibration:
This function requires a standard gas cylinder for zero calibration and a solenoid valve for opening/closing the gas flow line. When this function is activated, the analyzer opens and closes the solenoid valve driving contact periodically at preset cycle. The cycle for the auto zero calibration and that for the auto calibration can be different.
Auto calibration cycle setting:
1 hour to 99 hours (in increments of 1 hour) or
1 day to 40 days (in increments of 1 day).
Gas flow time setting:
The time during which calibration gas is drawn
60 seconds to 900 seconds (in increments of 1 second)

Upper/lower limit alarm:
When an instantaneous value has gone beyond the upper limit or below the lower limit, the analyzer closes the contact to emit an alarm signal. Up to four alarms are available.

Instrument error contact output:
The contact is closed if a device error occurs.

Calibration error contact output:
The contact is closed if a calibration error occurs.

Auto calibration status contact output:
The contact is closed during auto calibration.

O_2 correction:
Conversion of measured NO, CO, and SO_2 gas concentrations into values at reference O_2 concentration
Correction formula:

$$C = \frac{21-On}{21-Os} \times Cs$$

C: Sample gas concentration after O_2 correction
Cs: Measured concentration of sample gas
Os: Measured O_2 concentration
On: Reference O_2 concentration
(changeable by setting)
* The upper limit value of the fractional part in this calculation is 4. The result of calculation is indicated and transmitted as an analog output signal.

Average value after O_2 correction and O_2 average value calculation:

The analyzer can take measurement every 30 seconds, and calculate the moving average of instantaneous concentration after O_2 correction or instantaneous O_2 value per the period you set; in the range 1–59 min (in one minute increment) or 1–4 hour (in one hour increment). The analyzer transmits the moving average output every 30 seconds.

Average value resetting:

The above-mentioned output of average value is started from the initial state by opening the average value resetting input terminals after short circuiting for 1.5 sec or longer. Output is reset by input voltage and restarted by opening the terminal circuit.

Communication function:

RS-485 (9pins D-sub connector)
Half-duplex bit serial
Start-stop synchronization
Modbus RTU™ protocol
Contents: Read/Write parameters
Read measurement concentration and instrument status
When connecting via RS-232C interface, an RS-232C ↔ RS-485 converter should be used.

Atmospheric pressure correction:

Measure atmospheric pressure and calculate compensation (for use, be sure to relieve the exhaust gas from analyzer to the atmosphere)
After atmospheric pressure correction;
Zero point: No influenced
Span point: The change is 0.5% measured value or less relating to the change of the atmospheric pressure 1%.
Correction range: 700hPa-1050hPa

Performance

Repeatability:

±0.5% of full scale

Linearity:

1% of full scale
prior to atmospheric pressure correction (option)

Zero drift:

±2% of full scale/week
In the case of NO and/or SO_2 measurement below 500 ppm range, with the auto zero calibration used.

Span drift:

±2% of full scale/week

Response time (for 90% FS response) :

1 to 15 sec electrical response. Within 10-30 seconds including replacement time of sampling gas.
Gas replacement time depends on the number of measuring components,and measuring range.
Interference from other gases:

Interference component	CO_2 analyzer	CO analyzer	CH_4 analyzer	SO_2 analyzer	NO analyzer
CO 1000 ppm	≤ 1.0 % FS	–	≤ 1.0 % FS	≤ 1.0 % FS	≤ 1.0 % FS
CO_2 15%	–	≤ 1.0 % FS*1	≤ 1.0 % FS	≤ 1.0 % FS	≤ 1.0 % FS*2
H_2O saturation at 20°C	≤ 1.0 % FS	≤ 1.0 % FS*3	≤ 1.0 % FS	–	–
H_2O saturation at 2°C	–	≤ 2.0 % FS	–	≤ 2.0 % FS	≤ 2.0 % FS
CH_4 1000 ppm	≤ 1.0 % FS	≤ 1.0 % FS	–	≤ 20 ppm	–

*1: 0–200 ppm range: ≤ 2.0% FS
*2: 0–500 ppm range: ≤ 2.0% FS
*3: 0–500 ppm range: ≤ 2.0% FS
Interference for 0–200 ppm range may be greater than 2.0% FS depending on conditions.

Requirements for Sample Gas

Flow rate:

0.5 ±0.2L / min

Temperature:

0 to 50°C

Pressure:

10 kPa or less (Gas outlet side should be open to the atmospheric air.)

Dust:

100 μg/Nm^3 or less in particle size of 0.3 μm or smaller

Mist:

Unallowable

Moisture:

For sample gases NO, SO_2, CO (0-200 ppm range): less than 2°C saturation point.
For most other sample gases: less than standard room temperature saturation point.

Corrosive component:

1 ppm or less

Standard gas for calibration:

1) For measurement with IR and/or built-in O_2 sensor
Zero gas; Dry N_2
Span gas; Each sample gas having concentration of 90 to 100% of its measuring range (recommended).
2) For measurement with external zirconia O_2 sensor and when calibration is carried out on the same calibration gas line:
Zero gas; Dry air or atmospheric air (This is not allowed for CO_2 measurement.)
Span gas; For other than O_2 measurement, each sample gas having concentration of 90 to 100% of its measuring range
* For O_2 measurement, 1–2 vol% O_2, balance N_2
3) Reverse range O_2 measurement
Zero gas; 100vol% O_2
Span gas; 95.0 to 95.5 vol% O_2, balance N_2
* If you use the reverse range O_2 measurement, IR measurement is not available.

Installation Requirements

- Indoor use. Select a place where the equipment does not receive direct sunlight, wind and rain, or radiation from hot substances. If such a place cannot be found, a roof or cover should be prepared for protection.
- Avoid a place where unit receives heavy vibration
- Select a place where atmospheric air is clean

EU Directive Compliance CE

LVD (2014/35/EU)
EN 61010-1
EN 62311
EMC (2014/30/EU)
EN 61326-1(Table 2)
EN 55011(Group 1 Class A)
EN 61000-3-2(Class A)
EN 61000-3-3
EN61326-2-3
RoHS (2011/65/EU)
EN 50581

PRINCIPLE

NDIR sensor (for CO_2, CO, CH_4, SO_2, NO)

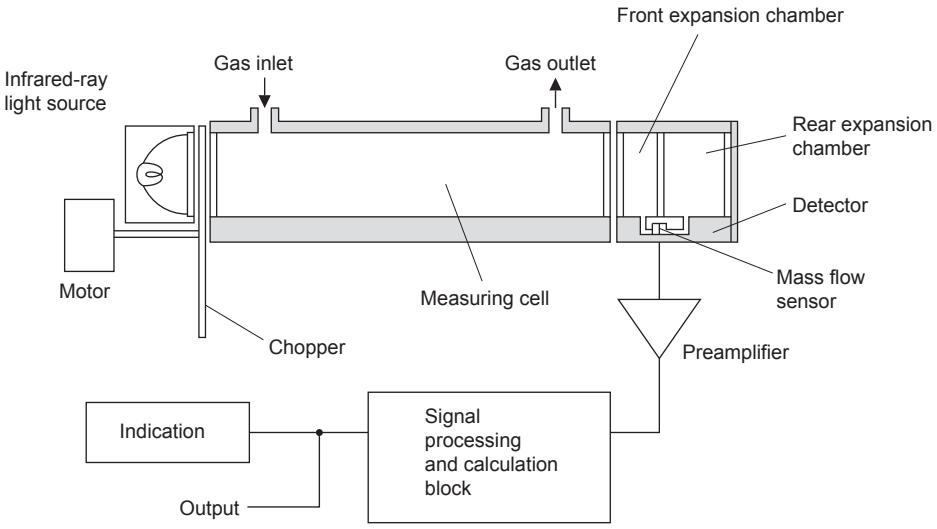

Paramagnetic sensor (for O_2)

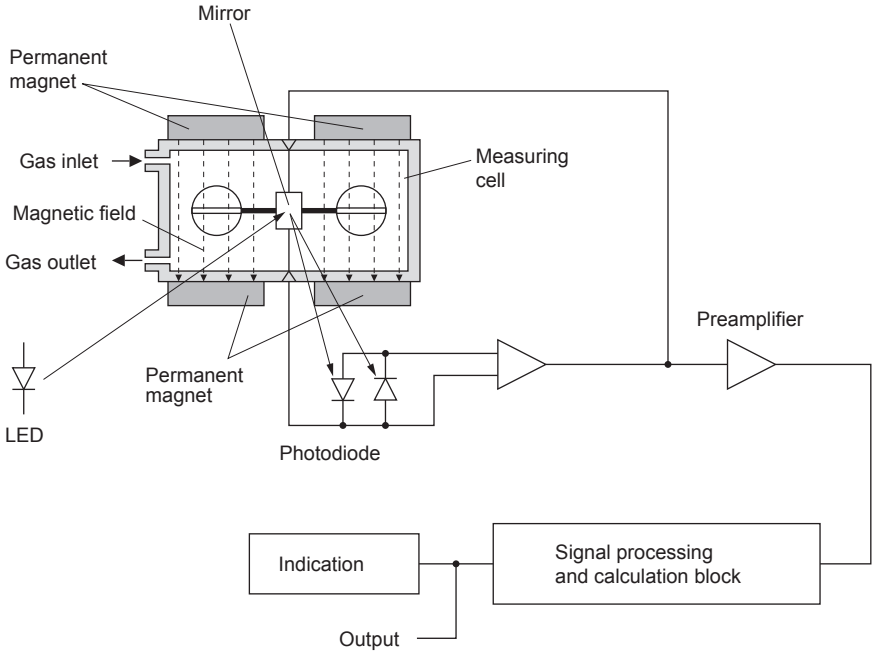

Galvanic fule cell (for O_2)

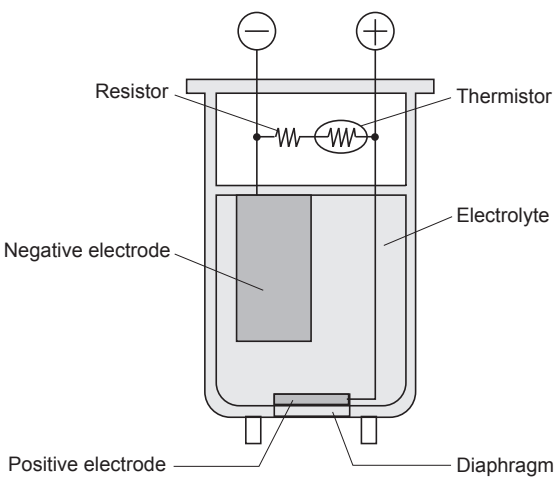

SYSTEM CONFIGURATION EXAMPLES

CO, CO_2, or CH_4 with low-level moisture

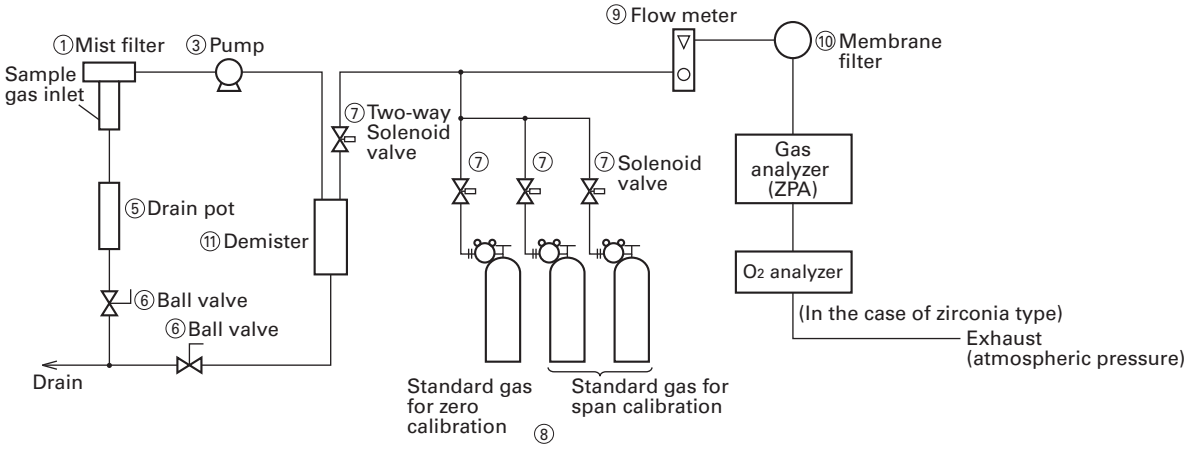

NO, SO_2, 0-200 ppm range CO, or other gases with high-level moisture

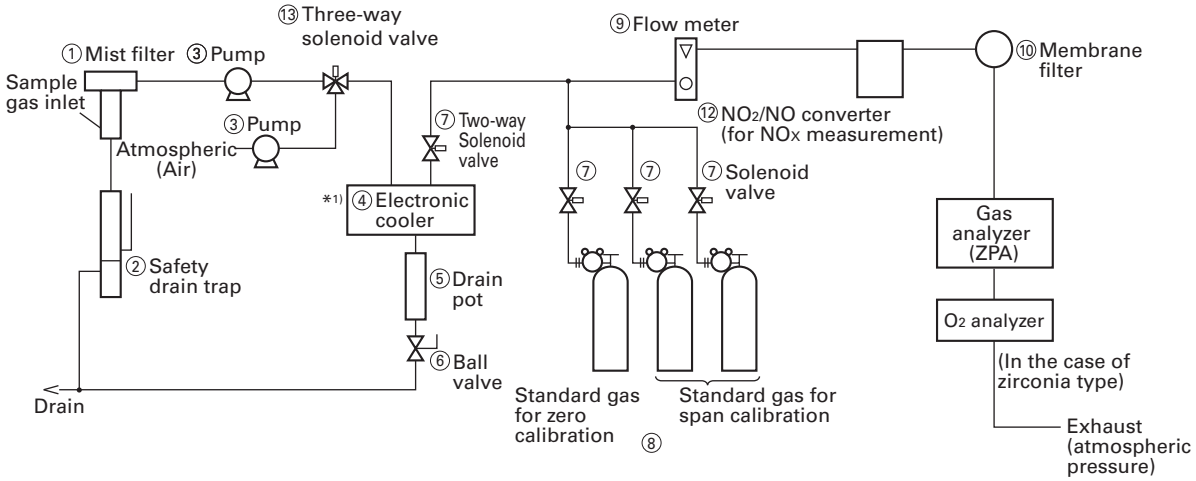

*1) For NO, SO_2, or 0–200 ppm range CO measurement, be sure to use an electronic cooler to keep the moisture content below the level saturated at 2°C.

List of sampling devices (example)

No.	Device name	Fuji's type
①	Mist filter	ZBBK1V03-0
②	Safety drain trap	ZBH51603
③	Pump	ZBG80
④	Electoric cooler	ZBC91004
⑤	Drain pot	ZBH13003 (Length 255mm)
⑥	Ball valve	ZBFB1
⑦	Two-way solenoid valve	
⑧	Standard gas for calibration	ZBM□Y04-0□(Codes in□ to be selected depending on application)
⑨	Flow meter	ZBD42203
⑩	Membrane filter	ZBBM2V03-0
⑪	Demister	ZBH35003
⑫	NO_2/NO converter	ZDL02001
⑬	Three-way solenoid valve	

Note) The above is a typical configuration example. As configuration may differ depending on measuring objects, please consult us.

CODE SYMBOLS

Digit	Description	note	1 2 3 4 5 6 7 8 - 9 10 11 12 13 - 14 15 16 17 18 19 20 - 21 22 23 24 25 26 ← Digit
			Z P A B 2
4	<Specification/Structure>		
	Horizontal type (Terminal block for power supply)		A
	Horizontal type (Power inlet, with lock)	note1	D
5	<Mounting>		
	19inch rack mounting type EIA conformity		B
6	<Measurable component (NDIR)>		
	1st component / 2nd component / 3rd component / 4th component		
	None / - / - / -	note2	Y
	NO / - / - / -		P
	SO_2 / - / - / -		A
	CO_2 / - / - / -		D
	CO / - / - / -		B
	CH_4 / - / - / -		E
	NO / SO_2 / - / -		F
	NO / CO / - / -		G
	SO_2 / CO_2 / - / -		H
	CO_2 / CO / - / -		J
	CH_4 / CO / - / -		K
	CO_2 / CH_4 / - / -		L
	NO / SO_2 / CO / -		N
	CO_2 / CO / CH_4 / -		T
	NO / SO_2 / CO_2 / CO		V
	Others		Z
7	<Measurable component (O_2)>		
	None		Y
	External O_2 analyzer	note3	1
	External zirconia O_2 analyzer (ZFK7)		2
	Built-in galvanic fuel cell O_2 analyzer		3
	Built-in paramagnetic O_2 analyzer		4
8	<Revision code>		2
9	<Measuring range (NDIR)>1st component, 1st range	note4	
10	<Measuring range (NDIR)>1st component, 2nd range	note4	
11	<Measuring range (NDIR)>2nd component, 1st range	note4	
12	<Measuring range (NDIR)>2nd component, 2nd range	note4	
13	<Measuring range (NDIR)>3rd component, 1st range	note4	
14	<Measuring range (NDIR)>3rd component, 2nd range	note4	
15	<Measuring range (NDIR)>4th component, 1st range	note4	
16	<Measuring range (NDIR)>4th component, 2nd range	note4	
17	<Measuring range (O_2)>	note4	
	None		Y
	0-5/10vol%		A
	0-5/25vol%		B
	0-10/25vol%		C
	0-5vol%		L
	0-10vol%		M
	0-25vol%		V
	0-50vol%		P
	0-100vol%		R
	100-95vol%		S
	Others		Z
18	<Gas connection>		
	Rc1/4		1
	NPT1/4		2
19	<Output>		
	0–1V DC		A
	4–20mA DC		B
	0–1V DC + Communication		C
	4–20mA DC+ Communication		D
20	<Indication/power supply cord>	note5	
	Japanese, cord rated 125V (PSE)		J
	English, cord rated 125V (UL)		E
	English, cord rated 250V (CEE)		U
	Chinese, cord rated 250V (CCC)		C
21	<O_2 correction and O_2 correction average output>	note6	
	None		Y
	O_2 correction		A
	O_2 correction average		B
	O_2 correction and O_2 correction average		C
22	<Optional function (DIO)>		
	FAULT / A. Cal. / H/L Alarm / RangeID/Remote range		
	None		Y
	○ /		A
	○ / ○ /		B
	○ /	○ /	C
	○ /		D
	○ / ○ / ○ /		E
	○ /	○ / ○ /	F
	○ / ○ /		G
	○ / ○ / ○ / ○	note7	H

Digit	Description	note	1 2 3 4 5 6 7 8 - 9 10 11 12 13 - 14 15 16 17 18 19 20 - 21 22 23 24 25 25 ← Digit
			Z P A B 2
23	<Pressure compensation> None Pressure compensation		Y 1
24	<Unit> ppm, vol% mg/m³, g/m³	 note8	A B
25	<Adjustment> For standard For heat treatment furnace For converter Others	note9 note10	A C D Z
26	<Others> Non-standard		Z

NDIR range codes

Range	Code
None	Y
0 to 100ppm	B
0 to 200ppm	C
0 to 250ppm	D
0 to 300ppm	S
0 to 500ppm	E
0 to 1000ppm	F
0 to 2000ppm	G
0 to 2500ppm	U
0 to 3000ppm	T
0 to 5000ppm	H

Range	Code
0 to 1vol%	J
0 to 2vol%	K
0 to 3vol%	Q
0 to 5vol%	L
0 to 10vol%	M
0 to 20vol%	N
0 to 25vol%	V
0 to 40vol%	W
0 to 50vol%	P
0 to 70vol%	X
0 to 100vol%	R
Others	Z

O_2 range codes

Measurement range	Range code	Galvanic fuel cell (built - in)	Paramagnetic cell (built - in)	Zirconia cell (external)
0 to 5/10 vol%	A		○ note11	○
0 to 5/25 vol%	B		○ note11	○
0 to 10/25 vol%	C	○	○	○
0 to 5 vol%	L		○ note11	○
0 to 10 vol%	M	○	○	○
0 to 25 vol%	V	○	○	○
0 to 50 vol%	P		○	
0 to 100 vol%	R		○	
100 to 95 vol%	S		○	

note1) If you select "D" in the 4th code, the analyzer comes with the power cable. Specify the rating of the power cable in the 20th code.

note2) If you use this analyzer only for oxygen measurement, select "Y" in the 6th code.

note3) If you use an external O_2 sensor (7th code "1"), set 0–1 V DC linear signals from the external O_2 analyzer so that they corresponds to the full scale setting of the analyzer.
Note that the external O_2 analyzer (7th code"1") and the external zirconia O_2 sensor ZFK7 (7th code "2") need to be ordered separately.

note4) Check the possible combination of measuring components and ranges in Table 1. Specify the range with the range codes shown in the above tables.

note5) If you select "D" in the 4th code, select the appropriate cable specification for end user in the 20th code.
If you select "A" in the 4th code, the power cable is not supplied. If you need no power cable and want to order the manual written in English, select "E" in the 20th code.

note6) O_2 correction is provided only for NO, SO_2, and CO measurement.
When "H" is specified for the 6th digit, "A, B, or C" cannot be selected for the 21st digit.

note7) The 22nd code "H" is not available for five-component measurement.
If you use four-component measurement and select "H" in the 22nd code, the maximum number of the H/L alarm outputs is three.

note8) Even if you selected "B" in the 24th code, select the range in ppm that is shown in the above "NDIR range codes" table. We will set the analyzer after converting the ppm ranges into mg/m³ ranges. For the converted ranges, see the "ppm-mg/m³ conversion table" shown below.

note9) When A, C, or D is specified at 25th digit, the analyzer will be adjusted and delivered with the following balance gasses.
Standard "A": balance gas N_2
For heat treatment furnace "C": CO_2 analyzer: 25% CO + 30% H_2 + residue N_2
CO analyzer: 5% CO_2 + 30% H_2 + residue N_2
CH_4 analyzer: 25% CO + 30% H_2 + residue N_2
For converter "D": balance gas CO, CO
When other adjustment is required, please select "Z". In that case, please provide a list of gas composition of the process gas.

note10) When the 25th code is "C", the range codes "X" and "R" are not available.

note11) NDIR range codes "V", "W", "P", "X", and "R" are not available.

ppm–mg/m³ conversion table

Range code	ppm	Range in mg/m³		
		NO	SO_2	CO
C	0–200	—	—	0–250 mg/m³
D	0–250	—	—	0–300 mg/m³
S	0–300	—	—	0–375 mg/m³
E	0–500	0–650 mg/m³	0–1400 mg/m³	0–600 mg/m³
F	0–1000	0–1300 mg/m³	0–2800 mg/m³	0–1250 mg/m³
G	0–2000	0–2600 mg/m³	0–5600 mg/m³	0–2500 mg/m³
U	0–2500	0–3300 mg/m³	0–7100 mg/m³	0–3000 mg/m³
T	0–3000	0–4000 mg/m³	0–8500 mg/m³	0–3750 mg/m³
H	0–5000	0–6600 mg/m³	0–14.00 g/m³	0–6250 mg/m³

Conversion formula
NO (mg/m³) = 1.34 × NO (ppm)
SO_2 (mg/m³) = 2.86 × SO_2 (ppm)
CO (mg/m³) = 1.25 × CO (ppm)

Table 1 Measurable component and range - availability check table -

Range selection procedure

One component analyzer:

First determine 1st range, then select 2nd range from the corresponding column.

Two or more component analyzer:

1. Check the available options referring to the below tables, and determine the 1st range. Select the corresponding range code from "NDIR range codes" on Page 8.
2. The 2nd range must be greater than the 1st range but no greater than the value in the column "2nd range (max.)". Check the available options referring to the below tables, and determine the 2nd range. Select the corresponding range code from "NDIR range codes" on Page 8.

1-component analyzer : CO

1st range	2nd range
0 - 200ppm	None, 0 - 250ppm,300ppm,500ppm,1000ppm,2000ppm
0 - 250ppm	None, 0 - 300ppm,500ppm,1000ppm,2000ppm,2500ppm
0 - 300ppm	None, 0 - 500ppm,1000ppm,2000ppm,2500ppm
0 - 500ppm	None, 0 - 1000ppm,2000ppm,2500ppm,3000ppm,5000ppm
0 - 1000ppm	None, 0 - 2000ppm,2500ppm,3000ppm,5000ppm,1%
0 - 2000ppm	None, 0 - 2500ppm,3000ppm,5000ppm,1%,2%
0 - 2500ppm	None, 0 - 3000ppm,5000ppm,1%,2%
0 - 3000ppm	None, 0 - 5000ppm,1%,2%
0 - 5000ppm	None, 0 - 1%,2%,3%,5%
0 - 1%	None, 0 - 2%,3%,5%,10%
0 - 2%	None, 0 - 3%,5%,10%,20%
0 - 3%	None, 0 - 5%,10%,20%,25%
0 - 5%	None, 0 - 10%,20%,25%,40%,50%
0 - 10%	None, 0 - 20%,25%,40%,50%,70%,100%
0 - 20%	None, 0 - 25%,40%,50%,70%,100%
0 - 25%	None, 0 - 40%,50%,70%,100%
0 - 40%	None, 0 - 50%,70%,100%
0 - 50%	None, 0 - 70%,100%
0 - 70%	None, 0 - 100%
0 - 100%	None

1-component analyzer : CO_2

1st range	2nd range
0 - 100ppm	None, 0 - 200ppm,250ppm,300ppm,500ppm,1000ppm
0 - 200ppm	None, 0 - 250ppm,300ppm,500ppm,1000ppm,2000ppm
0 - 250ppm	None, 0 - 300ppm,500ppm,1000ppm,2000ppm,2500ppm
0 - 300ppm	None, 0 - 500ppm,1000ppm,2000ppm,2500ppm
0 - 500ppm	None, 0 - 1000ppm,2000ppm,2500ppm,3000ppm,5000ppm
0 - 1000ppm	None, 0 - 2000ppm,2500ppm,3000ppm,5000ppm,1%
0 - 2000ppm	None, 0 - 2500ppm,3000ppm,5000ppm,1%,2%
0 - 2500ppm	None, 0 - 3000ppm,5000ppm,1%,2%
0 - 3000ppm	None, 0 - 5000ppm,1%,2%
0 - 5000ppm	None, 0 - 1%,2%,3%,5%
0 - 1%	None, 0 - 2%,3%,5%,10%
0 - 2%	None, 0 - 3%,5%,10%,20%
0 - 3%	None, 0 - 5%,10%,20%,25%
0 - 5%	None, 0 - 10%,20%,25%,40%,50%
0 - 10%	None, 0 - 20%,25%,40%,50%,70%,100%
0 - 20%	None, 0 - 25%,40%,50%,70%,100%
0 - 25%	None, 0 - 40%,50%,70%,100%
0 - 40%	None, 0 - 50%,70%,100%
0 - 50%	None, 0 - 70%,100%
0 - 70%	None, 0 - 100%
0 - 100%	None

1-component analyzer : NO

1st range	2nd range
0 - 200ppm	None, 0 - 250ppm,300ppm,500ppm,1000ppm,2000ppm
0 - 250ppm	None, 0 - 300ppm,500ppm,1000ppm,2000ppm,2500ppm
0 - 300ppm	None, 0 - 500ppm,1000ppm,2000ppm,2500ppm
0 - 500ppm	None, 0 - 1000ppm,2000ppm,2500ppm,3000ppm,5000ppm
0 - 1000ppm	None, 0 - 2000ppm,2500ppm,3000ppm,5000ppm
0 - 2000ppm	None, 0 - 2500ppm,3000ppm,5000ppm
0 - 2500ppm	None, 0 - 3000ppm,5000ppm
0 - 3000ppm	None, 0 - 5000ppm
0 - 5000ppm	None

1-component analyzer : SO_2

1st range	2nd range
0 - 200ppm	None, 0 - 250ppm,300ppm,500ppm,1000ppm,2000ppm
0 - 250ppm	None, 0 - 300ppm,500ppm,1000ppm,2000ppm,2500ppm
0 - 300ppm	None, 0 - 500ppm,1000ppm,2000ppm,2500ppm
0 - 500ppm	None, 0 - 1000ppm,2000ppm,2500ppm,3000ppm,5000ppm
0 - 1000ppm	None, 0 - 2000ppm,2500ppm,3000ppm,5000ppm,1%
0 - 2000ppm	None, 0 - 2500ppm,3000ppm,5000ppm,1%,2%
0 - 2500ppm	None, 0 - 3000ppm,5000ppm,1%,2%
0 - 3000ppm	None, 0 - 5000ppm,1%,2%
0 - 5000ppm	None, 0 - 1%,2%,3%,5%
0 - 1%	None, 0 - 2%,3%,5%,10%
0 - 2%	None, 0 - 3%,5%,10%
0 - 3%	None, 0 - 10%
0 - 5%	None, 0 - 10%
0 - 10%	None

1-component analyzer : CH_4

1st range	2nd range
0 - 500ppm	None, 0 - 1000ppm,2000ppm,2500ppm,3000ppm,5000ppm
0 - 1000ppm	None, 0 - 2000ppm,2500ppm,3000ppm,5000ppm,1%
0 - 2000ppm	None, 0 - 2500ppm,3000ppm,5000ppm,1%,2%
0 - 2500ppm	None, 0 - 3000ppm,5000ppm,1%,2%
0 - 3000ppm	None, 0 - 5000ppm,1%,2%
0 - 5000ppm	None, 0 - 1%,2%,3%,5%
0 - 1%	None, 0 - 2%,3%,5%,10%
0 - 2%	None, 0 - 3%,5%,10%,20%
0 - 3%	None, 0 - 5%,10%,20%,25%
0 - 5%	None, 0 - 10%,20%,25%,40%,50%
0 - 10%	None, 0 - 20%,25%,40%,50%,70%,100%
0 - 20%	None, 0 - 25%,40%,50%,70%,100%
0 - 25%	None, 0 - 40%,50%,70%,100%
0 - 40%	None, 0 - 50%,70%,100%
0 - 50%	None, 0 - 70%,100%
0 - 70%	None, 0 - 100%
0 - 100%	None

2-component analyzer : NO/SO_2

1-component : NO	
1st range	2nd range (max.)
0 - 200ppm	0 - 2000ppm
0 - 250ppm	0 - 2500ppm
0 - 300ppm	0 - 2500ppm
0 - 500ppm	0 - 5000ppm
0 - 1000ppm	0 - 5000ppm
0 - 2000ppm	0 - 5000ppm
0 - 2500ppm	0 - 5000ppm
0 - 3000ppm	0 - 5000ppm
0 - 5000ppm	None

Select the second component from the table on the right.

2-component : SO_2	
1st range	2nd range (max.)
0 - 200ppm	0 - 2000ppm
0 - 250ppm	0 - 2500ppm
0 - 300ppm	0 - 2500ppm
0 - 500ppm	0 - 5000ppm
0 - 1000ppm	0 - 5000ppm
0 - 2000ppm	0 - 5000ppm
0 - 2500ppm	0 - 5000ppm
0 - 3000ppm	0 - 5000ppm
0 - 5000ppm	None

2-component analyzer : NO/CO

1-component : NO	
1st range	2nd range (max.)
0 - 200ppm	0 - 2000ppm
0 - 250ppm	0 - 2500ppm
0 - 300ppm	0 - 2500ppm
0 - 500ppm	0 - 5000ppm
0 - 1000ppm	0 - 5000ppm
0 - 2000ppm	0 - 5000ppm
0 - 2500ppm	0 - 5000ppm
0 - 3000ppm	0 - 5000ppm
0 - 5000ppm	None

Select the second component from the table on the right.

2-component : CO	
1st range	2nd range (max.)
0 - 200ppm	0 - 2000ppm
0 - 250ppm	0 - 2500ppm
0 - 300ppm	0 - 2500ppm
0 - 500ppm	0 - 5000ppm
0 - 1000ppm	0 - 5000ppm
0 - 2000ppm	0 - 5000ppm
0 - 2500ppm	0 - 5000ppm
0 - 3000ppm	0 - 5000ppm
0 - 5000ppm	None

2-component analyzer : SO_2/CO_2

1-component : SO_2	
1st range	2nd range (max.)
0 - 200ppm	0 - 2000ppm
0 - 250ppm	0 - 2500ppm
0 - 300ppm	0 - 2500ppm
0 - 500ppm	0 - 5000ppm
0 - 1000ppm	0 - 5000ppm
0 - 2000ppm	0 - 5000ppm
0 - 2500ppm	0 - 5000ppm
0 - 3000ppm	0 - 5000ppm
0 - 5000ppm	None

Select the second component from the table on the right.

2-component : CO_2	
1st range	2nd range (max.)
0 - 10%	0 - 25%

2-component analyzer: CO_2/CO

1-component: CO_2		2-component: CO
1st range	2nd range (max.)	1st range/2nd range (max.)
0-100ppm	0-1000ppm	0-200/2000ppm, 0-250/2500ppm, 0-300/2500ppm, 0-500/2500ppm, 0-1000/2500ppm, 0-2000/2500ppm, 0-2500ppm
0-200ppm	0-2000ppm	0-200/2000ppm, 0-250/2500ppm, 0-300/2500ppm, 0-500/5000ppm, 0-1000/5000ppm, 0-2000/5000ppm, 0-2500/5000ppm,
0-250ppm	0-2500ppm	0-3000ppm/2%, 0-5000ppm/3%, 0-1/3%, 0-2/3%, 0-3%
0-300ppm		
0-500ppm		
0-500ppm	0-5000ppm	0-500/5000ppm, 0-1000/5000ppm, 0-2000/5000ppm, 0-2500/5000ppm, 0-3000ppm/2%, 0-5000ppm/3%, 0-1/3%, 0-2/3%, 0-3%
0-1000ppm	0-5000ppm	0-200/2000ppm, 0-250/2500ppm, 0-300/2500ppm, 0-500/5000ppm, 0-1000ppm/1%, 0-2000ppm/2%, 0-2500ppm/2%,
0-2000ppm		0-3000ppm/2%, 0-5000ppm/5%, 0-1/10%, 0-2/10%, 0-3/10%, 0-5/50%, 0-10/50%, 0-20/50%, 0-25/50%, 0-40/50%, 0-50%
0-1000ppm	0-1%	0-500/5000ppm, 0-1000ppm/1%, 0-2000ppm/2%, 0-2500ppm/2%, 0-3000ppm/2%, 0-5000ppm/5%, 0-1/10%, 0-2/10%, 0-3/10%, 0-5/50%, 0-10/50%, 0-20/50%, 0-25/50%, 0-40/50%, 0-50%
0-2000ppm	0-1%	0-500/5000ppm, 0-1000ppm/1%, 0-2000ppm/2%, 0-2500ppm/2%, 0-3000ppm/2%, 0-5000ppm/5%, 0-1/10%, 0-2/10%, 0-3/25%, 0-5/50%, 0-10/50%, 0-20/50%, 0-25/50%, 0-40/50%, 0-50%
0-2000ppm	0-2%	0-2000ppm/2%, 0-2500ppm/2%, 0-3000ppm/2%, 0-5000ppm/5%, 0-1/10%, 0-2/10%, 0-3/25%, 0-5/50%, 0-10/50%, 0-20/50%, 0-25/50%, 0-40/50%, 0-50%
0-2500ppm	0-1%	0-200/2000ppm, 0-250/2500ppm, 0-300/2500ppm, 0-500/5000ppm, 0-1000ppm/1%, 0-2000ppm/2%, 0-2500ppm/2%, 0-3000ppm/2%, 0-5000ppm/5%, 0-1/10%, 0-2/10%, 0-3/25%, 0-5/50%, 0-10/50%, 0-20/50%, 0-25/50%, 0-40/50%, 0-50%
0-2500ppm	0-2%	0-200/2000ppm, 0-250/2500ppm, 0-300/2500ppm, 0-2000ppm/2%, 0-2500ppm/2%, 0-3000ppm/2%, 0-5000ppm/5%, 0-1/10%, 0-2/10%, 0-3/25%, 0-5/50%, 0-10/50%, 0-20/50%, 0-25/50%, 0-40/50%, 0-50%
0-3000ppm	0-1%	0-200/2000ppm, 0-250/2500ppm, 0-300/2500ppm, 0-500/5000ppm, 0-1000ppm/1%, 0-2000ppm/2%, 0-2500ppm/2%, 0-3000ppm/2%, 0-5000ppm/5%, 0-1/10%, 0-2/10%, 0-3/25%, 0-5/50%, 0-10/100%, 0-20/100%, 0-25/100%, 0-40/100%, 0-50/100%, 0-70/100%, 0-100%
0-3000ppm	0-2%	0-200/2000ppm, 0-250/2500ppm, 0-300/2500ppm, 0-1000ppm/1%, 0-2000ppm/2%, 0-2500ppm/2%, 0-3000ppm/2%, 0-5000ppm/5%, 0-1/10%, 0-2/10%, 0-3/25%, 0-5/25%, 0-10/100%,0-20/100%, 0-25/100%, 0-40/100%, 0-50/100%, 0-70/100%, 0-100%
0-5000ppm	0-3%	0-500/5000ppm, 0-1000ppm/1%, 0-2000ppm/2%, 0-2500ppm/2%, 0-3000ppm/2%, 0-5000ppm/5%, 0-1/10%, 0-2/20%,
0-1%	0-5%	0-3/25%, 0-5/50%, 0-10/100%, 0-20/100%, 0-25/100%, 0-40/100%, 0-50/100%, 0-70/100%, 0-100%
0-2%	0-5%	
0-5000ppm	0-5%	0-500/5000ppm, 0-1000ppm/1%, 0-2000ppm/2%, 0-2500ppm/2%, 0-3000ppm/2%, 0-5000ppm/5%, 0-1/10%, 0-2/20%, 0-3/25%, 0-5/50%, 0-10/50%, 0-20/100%, 0-25/100%, 0-40/100%, 0-50/100%, 0-70/100%, 0-100%
0-1%	0-10%	0-500/5000ppm, 0-1000ppm/1%, 0-2000ppm/1%, 0-2500ppm/1%, 0-3000ppm/2%, 0-5000ppm/5%, 0-1/10%, 0-2/20%, 0-3/25%, 0-5/25%, 0-10/100%, 0-20/100%, 0-25/100%, 0-40/100%, 0-50/100%, 0-70/100%, 0-100%
0-2%	0-20%	0-500/5000ppm, 0-1000ppm/1%, 0-2000ppm/1%, 0-2500ppm/1%, 0-3000ppm/2%, 0-5000ppm/5%, 0-1/10%, 0-2/20%, 0-3/25%, 0-5/50%, 0-10/50%, 0-20/100%, 0-25/100%, 0-40/100%, 0-50/100%, 0-70/100%, 0-100%
0-2%	0-10%	0-500/5000ppm, 0-1000ppm/1%, 0-2000ppm/1%, 0-2500ppm/1%, 0-3000ppm/2%, 0-5000ppm/5%, 0-1/10%, 0-2/20%,
0-3%	0-25%	0-3/25%, 0-5/50%, 0-10/100%, 0-20/100%, 0-25/100%, 0-40/100%, 0-50/100%, 0-70/100%, 0-100%
0-5%	0-50%	
0-10%	0-100%	0-1000ppm/1%, 0-2000ppm/1%, 0-2500ppm/1%, 0-3000ppm/2%, 0-5000ppm/5%, 0-1/10%, 0-2/20%, 0-3/25%, 0-5/50%,
0-20%		0-10/100%, 0-20/100%, 0-25/100%, 0-40/100%, 0-50/100%, 0-70/100%, 0-100%
0-25%		
0-40%		
0-50%		
0-70%		
0-100%	None	

2-component analyzer: CH_4/CO

1-component: CH_4		2-component: CO
1st range	2nd range (max.)	1st range/2nd range (max.)
0-500ppm	0-5000ppm	0-200/2000ppm, 0-250/2500ppm, 0-300/2500ppm, 0-500/2500ppm, 0-1000/2500ppm, 0-2000/2500ppm
0-1000ppm	0-5000ppm	0-200/2000ppm, 0-250/2500ppm, 0-300/2500ppm, 0-500/5000ppm, 0-1000/5000ppm, 0-2000/5000ppm, 0-2500/5000ppm, 0-3000/5000ppm
0-1000ppm	0-1%	0-500/5000ppm, 0-1000/5000ppm, 0-2000/5000ppm, 0-2500/5000ppm, 0-3000/5000ppm
0-2000ppm	0-5000ppm	0-200/2000ppm, 0-250/2500ppm, 0-300/2500ppm, 0-500/5000ppm, 0-1000ppm/1%, 0-2000ppm/1%, 0-2500ppm/1%, 0-3000ppm/1%, 0-5000ppm/5%, 0-1/5%, 0-2/20%, 0-3/20%, 0-5/20%, 0-10/20%
0-2500ppm	0-5000ppm	0-200/2000ppm, 0-250/2500ppm, 0-300/2500ppm, 0-500/5000ppm, 0-1000ppm/1%, 0-2000ppm/1%, 0-2500ppm/1% 0-3000ppm/1%,
0-3000ppm		0-5000ppm/5%, 0-1/5%, 0-2/20%, 0-3/25%, 0-5/25%, 0-10/25%
0-2000ppm	0-1%	0-500/5000ppm, 0-1000ppm/1%, 0-2000ppm/1%, 0-2500ppm/1%, 0-3000ppm/1%, 0-5000ppm/5%, 0-1/5%, 0-2/20%, 0-3/20%, 0-5/20%, 0-10/20%
0-2500ppm	0-1%	0-500/5000ppm, 0-1000ppm/1%, 0-2000ppm/1%, 0-2500ppm/1%, 0-3000ppm/1%, 0-5000ppm/5%, 0-1/5%, 0-2/20%, 0-3/25%, 0-5/25%, 0-10/25%
0-3000ppm		
0-2000ppm	0-2%	0-1000ppm/1%, 0-2000ppm/1%, 0-2500ppm/1%, 0-3000ppm/1%, 0-5000ppm/5%, 0-1/5%, 0-2/20%, 0-3/20%, 0-5/20%, 0-10/20%
0-2500ppm	0-2%	0-1000ppm/1%, 0-2000ppm/1%, 0-2500ppm/1%, 0-3000ppm/1%, 0-5000ppm/5%, 0-1/5%, 0-2/20%, 0-3/25%, 0-5/25%, 0-10/25%
0-3000ppm		
0-5000ppm	0-1%	0-500/5000ppm, 0-1000ppm/1%, 0-2000ppm/1%, 0-2500ppm/1%, 0-3000ppm/1%, 0-5000ppm/5%, 0-1/5%, 0-2/20%, 0-3/25%, 0-5/50%, 0-10/50%, 0-20/50%, 0-25/50%, 0-40/50%, 0-50%
0-5000ppm	0-3%	0-1000ppm/1%, 0-2000ppm/1%, 0-2500ppm/1%, 0-3000ppm/1%, 0-5000ppm/5%, 0-1/5%, 0-2/10%, 0-3/25%, 0-5/50%, 0-10/50%, 0-20/50%, 0-25/50%, 0-40/50%, 0-50%
0-5000ppm	0-5%	0-1000ppm/1%, 0-2000ppm/1%, 0-2500ppm/1%, 0-3000ppm/1%, 0-5000ppm/5%, 0-1/5%, 0-2/5%, 0-3/25%, 0-5/25%, 0-10/50%, 0-20/50%, 0-25/50%, 0-40/50%, 0-50%
0-1%	0-5%	0-500/5000ppm, 0-1000ppm/1%, 0-2000ppm/1%, 0-2500ppm/1% ,0-3000ppm/1%, 0-5000ppm/5%, 0-1/10%, 0-2/20%, 0-3/25%, 0-5/50%, 0-10/100%, 0-20/100%, 0-25/100%, 0-40/100%, 0-50/100%, 0-70/100%, 0-100%
0-1%	0-10%	0-500/5000ppm, 0-1000ppm/1%, 0-2000ppm/1%, 0-2500ppm/1% ,0-3000ppm/1%, 0-5000ppm/1%, 0-1/10%, 0-2/10%, 0-3/10%, 0-5/50%, 0-10/50%, 0-20/100%, 0-25/100%, 0-40/100%, 0-50/100%, 0-70/100%, 0-100%
0-2%	0-10%	0-500/5000ppm, 0-1000ppm/1%, 0-2000ppm/2%, 0-2500ppm/2%, 0-3000ppm/2%, 0-5000ppm/2%, 0-1/10%, 0-2/20%, 0-3/20%, 0-5/50%, 0-10/100%, 0-20/100%,0-25/100%, 0-40/100%, 0-50/100%, 0-70/100%, 0-100%
0-2%	0-20%	0-500/5000ppm, 0-1000ppm/1%, 0-2000ppm/2%, 0-2500ppm/2%, 0-3000ppm/2%, 0-5000ppm/2%, 0-1/10%, 0-2/20%, 0-3/20%, 0-5/20%, 0-10/100%, 0-20/100%, 0-25/100%, 0-40/100%, 0-50/100%, 0-70/100%, 0-100%
0-3%	0-10%	0-500/5000ppm, 0-1000ppm/1%, 0-2000ppm/2%, 0-2500ppm/2%, 0-3000ppm/2%, 0-5000ppm/2%, 0-1/10%, 0-2/20%, 0-3/20%, 0-5/50%, 0-10/100%, 0-20/100%, 0-25/100%, 0-40/100%, 0-50/100%, 0-70/100%, 0-100%
0-3%	0-25%	0-1000ppm/1%, 0-2000ppm/2%, 0-2500ppm/2%, 0-3000ppm/2%, 0-5000ppm/2%, 0-1/10%, 0-2/20%, 0-3/20%, 0-5/20%, 0-10/100%, 0-20/100%, 0-25/100%, 0-40/100%, 0-50/100%, 0-70/100%, 0-100%
0-5%	0-25%	0-1000ppm/1%, 0-2000ppm/1%, 0-2500ppm/1%, 0-3000ppm/1%, 0-5000ppm/5%, 0-1/10%, 0-2/20%, 0-3/25%, 0-5/25%, 0-10/100%, 0-20/100%, 0-25/100%, 0-40/100%, 0-50/100%, 0-70/100%, 0-100%
0-5%	0-50%	0-1000ppm/1%, 0-2000ppm/1%, 0-2500ppm/1%, 0-3000ppm/1%, 0-5000ppm/5%, 0-1/5%, 0-2/5%, 0-3/25%, 0-5/25%, 0-10/100%, 0-20/100%, 0-25/100%, 0-40/100%, 0-50/100%, 0-70/100%, 0-100%
0-10%	0-50%	0-1000ppm/1%, 0-2000ppm/1%, 0-2500ppm/1%, 0-3000ppm/1%, 0-5000ppm/5%, 0-1/10%, 0-2/10%, 0-3/25%, 0-5/50%, 0-10/50%, 0-20/100%, 0-25/100%, 0-40/100%, 0-50/100%, 0-70/100%, 0-100%
0-10%	0-100%	0-5000ppm/5%, 0-1/10%, 0-2/10%, 0-3/10%, 0-5/50%, 0-10/50%, 0-20/100%, 0-25/100%, 0-40/100%, 0-50/100%, 0-70/100%, 0-100%
0-20%	0-50%	0-1000ppm/1%, 0-2000ppm/1%, 0-2500ppm/1%, 0-3000ppm/1%, 0-5000ppm/5%, 0-1/10%, 0-2/20%, 0-3/25%, 0-5/50%, 0-10/100%, 0-20/100%, 0-25/100%,
0-25%		0-40/100%, 0-50/100%, 0-70/100%, 0-100%
0-40%		
0-20%	0-100%	0-5000ppm/5%, 0-1/10%, 0-2/20%, 0-3/20%, 0-5/50%, 0-10/100%, 0-20/100%, 0-25/100%, 0-40/100%, 0-50/100%, 0-70/100%, 0-100%
0-25%		
0-40%		
0-50%		
0-70%		
0-100%	None	

2-component analyzer: CO_2/CH_4

1-component: CO_2		2-component: CH_4
1st range	2nd range (max.)	1st range/2nd range (max.)
0-100ppm	0-1000ppm	0-500/5000ppm, 0-1000/5000ppm, 0-2000/5000ppm, 0-2500/5000ppm, 0-3000/5000ppm, 0-5000ppm
0-200ppm	0-2000ppm	0-500/5000ppm, 0-1000ppm/1%, 0-2000ppm/1%, 0-2500ppm/1%, 0-3000ppm/1%, 0-5000ppm/1%, 0-1%
0-250ppm	0-2500ppm	
0-300ppm	0-2500ppm	
0-500ppm	0-2500ppm	0-500/5000ppm, 0-1000ppm/1%, 0-2000ppm/2%, 0-2500ppm/2%, 0-3000ppm/2%, 0-5000ppm/2%, 0-1/2%, 0-2/10%, 0-3/10%, 0-5/10%, 0-10%
0-500ppm	0-5000ppm	0-1000ppm/1%, 0-2000ppm/2%, 0-2500ppm/2%, 0-3000ppm/2%, 0-5000ppm/2%, 0-1/2%, 0-2/10%, 0-3/10%, 0-5/10%, 0-10%
0-1000ppm	0-2500ppm	0-500/5000ppm, 0-1000ppm/1%, 0-2000ppm/2%, 0-2500ppm/2%, 0-3000ppm/2%, 0-5000ppm/3%, 0-1/3%, 0-2/20%, 0-3/20%, 0-5/20%, 0-10/20%, 0-20%
0-1000ppm	0-5000ppm	0-1000ppm/1%, 0-2000ppm/2%, 0-2500ppm/2%, 0-3000ppm/2%, 0-5000ppm/3%, 0-1/3% 0-2/20%, 0-3/20%, 0-5/20%, 0-10/20%, 0-20%
0-1000ppm	0-1%	0-2000ppm/2%, 0-2500ppm/2%, 0-3000ppm/2%, 0-5000ppm/3%, 0-1/3%, 0-2/20%, 0-3/20%, 0-5/20%, 0-10/20%, 0-20%
0-2000ppm	0-2500ppm	0-500/5000ppm, 0-1000ppm/1%, 0-2000ppm/2%, 0-2500ppm/2%, 0-3000ppm/2%, 0-5000ppm/5%, 0-1/5%, 0-2/20%, 0-3/20%, 0-5/20%, 0-10/20%, 0-20%
0-2000ppm	0-5000ppm	0-1000ppm/1%, 0-2000ppm/2%, 0-2500ppm/2%, 0-3000ppm/2%, 0-5000ppm/5%, 0-1/5%, 0-2/20%, 0-3/20%, 0-5/20%, 0-10/20%, 0-20%
0-2000ppm	0-2%	0-2000ppm/2%, 0-2500ppm/2%, 0-3000ppm/2%, 0-5000ppm/5%, 0-1/5%, 0-2/20%, 0-3/20%, 0-5/20%, 0-10/20%, 0-20%
0-2500ppm	0-5000ppm	0-1000ppm/1%, 0-2000ppm/2%, 0-2500ppm/2%, 0-3000ppm/2%, 0-5000ppm/5%, 0-1/5%, 0-2/20%, 0-3/20%, 0-5/25%, 0-10/25%, 0-20/25%, 0-25%
0-2500ppm	0-2%	0-2000ppm/2%, 0-2500ppm/2%, 0-3000ppm/2%, 0-5000ppm/5%, 0-1/5%, 0-2/20%, 0-3/20%, 0-5/25%, 0-10/25%, 0-20/25%, 0-25%
0-3000ppm	0-2%	0-1000ppm/1%, 0-2000ppm/2%, 0-2500ppm/2%, 0-3000ppm/2%, 0-5000ppm/5%, 0-1/5% 0-2/20%, 0-3/20%, 0-5/25%, 0-10/25%, 0-20/25%, 0-25%
0-5000ppm	0-3%	0-500/5000ppm, 0-1000ppm/1%, 0-2000ppm/2%, 0-2500ppm/2%, 0-3000ppm/2%, 0-5000ppm/2%, 0-1/10%, 0-2/20%, 0-3/20%, 0-5/50%, 0-10/50%, 0-20/50%, 0-25/50%, 0-40/50%, 0-50%
0-5000ppm	0-5%	0-500/5000ppm, 0-1000ppm/1%, 0-2000ppm/2%, 0-2500ppm/2%, 0-3000ppm/2%, 0-5000ppm/2%, 0-1/10%, 0-2/20%, 0-3/20%, 0-5/20%, 0-10/50%, 0-20/50%, 0-25/50%, 0-40/50%, 0-50%
0-1%	0-10%	0-500/5000ppm, 0-1000ppm/1%, 0-2000ppm/2%, 0-2500ppm/2%, 0-3000ppm/2%, 0-5000ppm/2%, 0-1/10%, 0-2/20%, 0-3/25%, 0-5/50%, 0-10/50%, 0-20/50%, 0-25/50%, 0-40/50%, 0-50%
0-2%	0-20%	0-500/5000ppm, 0-1000ppm/1%, 0-2000ppm/2%, 0-2500ppm/2%, 0-3000ppm/2%, 0-5000ppm/2%, 0-1/10%, 0-2/10%, 0-3/10%, 0-5/25%, 0-10/100%, 0-20/100%, 0-25/100%, 0-40/100%, 0-50/100%, 0-70/100%, 0-100%
0-2%	0-10%	0-500/5000ppm, 0-1000ppm/1%, 0-2000ppm/2%, 0-2500ppm/2%, 0-3000ppm/2%, 0-5000ppm/2%, 0-1/10%, 0-2/20%, 0-3/25%, 0-5/50%, 0-10/100%,
0-3%		0-20/100%, 0-25/100%, 0-40/100%, 0-50/100%, 0-70/100%, 0-100%
0-3%	0-25%	0-500/5000ppm, 0-1000ppm/1%, 0-2000ppm/2%, 0-2500ppm/2%, 0-3000ppm/2%, 0-5000ppm/2%, 0-1/10%, 0-2/20%, 0-3/25%, 0-5/25%, 0-10/100%, 0-20/100%, 0-25/100%, 0-40/100%, 0-50/100%, 0-70/100%, 0-100%
0-5%	0-20%	0-500/5000ppm, 0-1000ppm/1%, 0-2000ppm/2%, 0-2500ppm/2%, 0-3000ppm/2%, 0-5000ppm/2%, 0-1/10%, 0-2/20%, 0-3/25%, 0-5/50%, 0-10/100%, 0-20/100%, 0-25/100%, 0-40/100%, 0-50/100%, 0-70/100%, 0-100%
0-5%	0-50%	0-1000ppm/1%, 0-2000ppm/2%, 0-2500ppm/2%, 0-3000ppm/2%, 0-5000ppm/2%, 0-1/10%, 0-2/20%, 0-3/25%, 0-5/50%, 0-10/50%, 0-20/100%, 0-25/100%, 0-40/100%, 0-50/100%, 0-70/100%, 0-100%
0-10%	0-20%	0-500/5000ppm, 0-1000ppm/1%, 0-2000ppm/2%, 0-2500ppm/2%, 0-3000ppm/2%, 0-5000ppm/2%, 0-1/10%, 0-2/20%, 0-3/25%, 0-5/50%, 0-10/100%, 0-20/100%, 0-25/100%, 0-40/100%, 0-50/100%, 0-70/100%, 0-100%
0-10%	0-50%	0-1000ppm/1%, 0-2000ppm/2%, 0-2500ppm/2%, 0-3000ppm/2%, 0-5000ppm/2%, 0-1/10%, 0-2/20%, 0-3/25%, 0-5/50%, 0-10/100%, 0-20/100%, 0-25/100%,
0-20%		0-40/100%, 0-50/100%, 0-70/100%, 0-100%
0-25%		
0-40%		
0-10%	0-100%	0-2000ppm/2%, 0-2500ppm/2%, 0-3000ppm/2%, 0-5000ppm/2%, 0-1/10%, 0-2/10%, 0-3/10%, 0-5/50%, 0-10/100%, 0-20/100%, 0-25/100%, 0-40/100%, 0-50/100%, 0-70/100%, 0-100%
0-20%	0-100%	0-2000ppm/2%, 0-2500ppm/2%, 0-3000ppm/2%, 0-5000ppm/2%, 0-1/10%, 0-2/10%, 0-3/25%, 0-5/50%, 0-10/100%, 0-20/100%, 0-25/100%, 0-40/100%, 0-50/100%, 0-70/100%, 0-100%
0-25%	0-100%	0-2000ppm/2%, 0-2500ppm/2%, 0-3000ppm/2%, 0-5000ppm/2%, 0-1/10%, 0-2/20%, 0-3/25%, 0-5/50%, 0-10/100%, 0-20/100%, 0-25/100%, 0-40/100%,
0-40%		0-50/100%, 0-70/100%, 0-100%
0-50%		
0-70%		
0-100%	None	

3-component analyzer: NO/SO_2/CO >>> Combination of 1st component NO and 2nd component SO_2 / 3rd component CO

1-component: NO	
1st range	2nd range (max.)
0-200ppm	0-2000ppm
0-250ppm	0-2500ppm
0-300ppm	0-2500ppm
0-500ppm	0-5000ppm
0-1000ppm	0-5000ppm
0-2000ppm	0-5000ppm
0-2500ppm	0-5000ppm
0-3000ppm	0-5000ppm
0-5000ppm	None

+

2-component: SO_2		3-component: CO
1st range	2nd range (max.)	1st range/2nd range (max.)
0-200ppm	0-2000ppm	0-200/2000ppm, 0-250/2500ppm, 0-300/2500ppm, 0-500/2500ppm, 0-1000/2500ppm, 0-2000/2500ppm, 0-2500ppm
0-250ppm	0-2500ppm	
0-300ppm		
0-500ppm	0-2500ppm	0-200/2000ppm, 0-250/2500ppm, 0-300/2500ppm, 0-500/5000ppm, 0-1000/5000ppm, 0-2000/5000ppm, 0-5000ppm
0-1000ppm		
0-2500ppm	None	
0-1000ppm	0-5000ppm	0-500/5000ppm, 0-1000/5000ppm, 0-2000/5000ppm, 0-2500/5000ppm, 0-3000/5000ppm, 0-5000ppm
0-2000ppm		
0-2500ppm		
0-3000ppm		
0-5000ppm	None	

3-component analyzer: CO_2/CO/CH_4 >>> Combination of 1st component CO_2 / 2nd component CO and 3rd component CH_4

1-component: CO_2		2-component: CO
1st range	2nd range (max.)	1st range/2nd range (max.)
0-5000ppm	0-3%	0-500/5000ppm, 0-1000ppm/1%, 0-2000ppm/2%, 0-2500ppm/2%, 0-3000ppm/2%, 0-5000ppm/5%, 0-1/10%, 0-2/20%, 0-3/25%, 0-5/50%, 0-10/100%, 0-20/100%, 0-25/100%, 0-40/100%, 0-50/100%, 0-70/100%, 0-100%
0-1%	0-5%	
0-2%	0-5%	
0-5000ppm	0-5%	0-500/5000ppm, 0-1000ppm/1%, 0-2000ppm/2%, 0-2500ppm/2%, 0-3000ppm/2%, 0-5000ppm/5%, 0-1/10%, 0-2/20%, 0-3/25%, 0-5/50%, 0-10/50%, 0-20/100%, 0-25/100%, 0-40/100%, 0-50/100%, 0-70/100%, 0-100%
0-1%	0-10%	0-500/5000ppm, 0-1000ppm/1%, 0-2000ppm/1%, 0-2500ppm/1%, 0-3000ppm/2%, 0-5000ppm/5%, 0-1/10%, 0-2/20%, 0-3/25%, 0-5/25%, 0-10/100%, 0-20/100%, 0-25/100%, 0-40/100%, 0-50/100%, 0-70/100%, 0-100%
0-2%	0-20%	0-500/5000ppm, 0-1000ppm/1%, 0-2000ppm/1%, 0-2500ppm/1%, 0-3000ppm/2%, 0-5000ppm/5%, 0-1/10%, 0-2/20%, 0-3/25%, 0-5/50%, 0-10/50%, 0-20/100%, 0-25/100%, 0-40/100%, 0-50/100%, 0-70/100%, 0-100%
0-2%	0-10%	0-500/5000ppm, 0-1000ppm/1%, 0-2000ppm/1%, 0-2500ppm/1%, 0-3000ppm/2%, 0-5000ppm/5%, 0-1/10%, 0-2/20%,0-3/25%, 0-5/50%, 0-10/100%, 0-20/100%, 0-25/100%, 0-40/100%, 0-50/100%, 0-70/100%, 0-100%
0-3%	0-25%	
0-5%	0-50%	
0-10%	0-100%	0-1000ppm/1%, 0-2000ppm/1%, 0-2500ppm/1%, 0-3000ppm/2%, 0-5000ppm/5%, 0-1/10%, 0-2/20%, 0-3/25%, 0-5/50%, 0-10/100%, 0-20/100%, 0-25/100%, 0-40/100%, 0-50/100%, 0-70/100%, 0-100%
0-20%		
0-25%		
0-40%		
0-50%		
0-70%		
0-100%	None	

+

3-component: CH_4		
1st range	2nd range (max.)	Availability of product
0-5000ppm	0-5%	Product available only when CO analyzer max. measuring range is 50% or less
0-1%	0-10%	Product available
0-2%	0-20%	
0-3%	0-25%	Product available only when CO analyzer measuring range is 0 to 1000ppm or more.
0-5%	0-10%	
0-10%	0-20%	
0-20%	0-25%	Product available only when CO analyzer measuring range is 0 to 5000ppm or more.
0-25%	0-40%	
0-40%	0-50%	
0-50%	0-70%	Available only when the CO analyzer range is 0–5000 ppm or more, and the CO_2 analyzer range is 0–2% or more
0-70%	0-100%	
0-100%	None	

4-component analyzer: NO/SO_2/CO_2/CO >>> Combination of 1st component NO /4th component CO and component 2nd component SO_2/3rd component CO_2

1-component: NO		4-component: CO
1st range	2nd range (max.)	1st range/2nd range (max.)
0-200ppm	0-2000ppm	0-200/2000ppm, 0-250/2500ppm, 0-300/2500ppm, 0-500/2500ppm, 0-1000/2500ppm, 0-2000/2500ppm, 0-2500ppm, None
0-250ppm	0-2500ppm	
0-300ppm	0-2500ppm	
0-500ppm	0-2000ppm	
0-1000ppm	0-2000ppm	
0-2000ppm	None	
0-500ppm	0-5000ppm	0-500/2500ppm, 0-1000/2500ppm, 0-2000/2500ppm, 0-2500ppm, None
0-1000ppm	0-5000ppm	
0-2000ppm	0-5000ppm	
0-2500ppm	0-5000ppm	
0-3000ppm	0-5000ppm	
0-5000ppm	None	

+

2-component analyzer: SO_2		3-component analyzer: CO_2
1st range	2nd range (max.)	1st range/2nd range (max.)
0-200ppm	0-2000ppm	0-1/10%, 0-2/20%, 0-3/20%, 0-5/50%, 0-10/50%, 0-20/50%, 0-25/50%, 0-40/50%, 0-50%/None
0-250ppm	0-2500ppm	
0-300ppm	0-2500ppm	
0-500ppm	0-5000ppm	
0-1000ppm	0-5000ppm	
0-2000ppm	0-5000ppm	
0-2500ppm	0-5000ppm	
0-3000ppm	0-5000ppm	
0-5000ppm	None	

Table 2 Channel (Ch) No. and display/output contents comparison table

Code symbol			
6th digit	7th digit	21st digit	Display/output contents
Y	1 to 4	Y	Ch1:O_2
P	Y	Y	Ch1:NO
A	Y	Y	Ch1:SO_2
D	Y	Y	Ch1:CO_2
B	Y	Y	Ch1:CO
E	Y	Y	Ch1:CH_4
F	Y	Y	Ch1:NO, Ch2:SO_2
G	Y	Y	Ch1:NO, Ch2:CO
H	Y	Y	Ch1:SO_2, Ch2:CO_2
J	Y	Y	Ch1:CO_2, Ch2:CO
K	Y	Y	Ch1:CH_4, Ch2:CO
L	Y	Y	Ch1:CO_2, Ch2:CH_4
N	Y	Y	Ch1:NO, Ch2:SO_2, Ch3:CO
T	Y	Y	Ch1:CO_2, Ch2:CO, Ch3:CH_4
V	Y	Y	Ch1:NO, Ch2:SO_2, Ch3:CO_2, Ch4:CO
P	1 to 4	Y	Ch1:NO, Ch2:O_2
A	1 to 4	Y	Ch1:SO_2, Ch2:O_2
D	1 to 4	Y	Ch1:CO_2, Ch2:O_2
B	1 to 4	Y	Ch1:CO, Ch2:O_2
E	1 to 4	Y	Ch1:CH_4, Ch2:O_2
F	1 to 4	Y	Ch1:NO, Ch2:SO_2, Ch3:O_2
G	1 to 4	Y	Ch1:NO, Ch2:CO, Ch3:O_2
H	1 to 4	Y	Ch1:SO_2, Ch2:CO_2, Ch3:O_2
J	1 to 4	Y	Ch1:CO_2, Ch2:CO, Ch3:O_2
K	1 to 4	Y	Ch1:CH_4, Ch2:CO, Ch3:O_2
L	1 to 4	Y	Ch1:CO_2, Ch2:CH_4, Ch3:O_2
N	1 to 4	Y	Ch1:NO, Ch2:SO_2, Ch3:CO, Ch4:O_2
T	1 to 4	Y *	Ch1:CO_2, Ch2:CO, Ch3:CH_4, Ch4:O_2
V	1 to 4	Y *	Ch1:NO, Ch2:SO_2, Ch3:CO_2, Ch4:CO, Ch5:O_2
P	1 to 4	A *	Ch1:NOx, Ch2:O_2, Ch3:corrected NOx
A	1 to 4	A *	Ch1:SO_2, Ch2:O_2, Ch3:corrected SO_2
B	1 to 4	A *	Ch1:CO, Ch2:O_2, Ch3:corrected CO
F	1 to 4	A *	Ch1:NOx, Ch2:SO_2, Ch3:O_2, Ch4:corrected NOx, Ch5:corrected SO_2
G	1 to 4	A *	Ch1:NOx, Ch2:CO, Ch3:O_2, Ch4:corrected NOx, Ch5:corrected CO
J	1 to 4	A *	Ch1:CO_2, Ch2:CO, Ch3:O_2, Ch4:corrected CO
N	1 to 4	A *	Ch1:NOx, Ch2:SO_2, Ch3:CO, Ch4:O_2, Ch5:corrected NOx, Ch6:corrected SO_2, Ch7:corrected CO
V	1 to 4	A *	Ch1:NOx, Ch2:SO_2, Ch3:CO_2, Ch4:CO, Ch5:O_2, Ch6:corrected NOx, Ch7:corrected SO_2, Ch8:corrected CO
P	1 to 4	C *	Ch1:NOx, Ch2:O_2, Ch3:corrected NOx, Ch4:corrected NOx average
A	1 to 4	C *	Ch1:SO_2, Ch2:O_2, Ch3:corrected SO_2, Ch4:corrected SO_2 average
B	1 to 4	C	Ch1:CO, Ch2:O_2, Ch3:corrected CO, Ch4corrected CO average
F	1 to 4	C *	Ch1:NOx, Ch2:SO_2, Ch3:O_2, Ch4:corrected NOx, Ch5:corrected SO_2, Ch6:corrected NOx average, Ch7:corrected SO_2 average
G	1 to 4	C * *	Ch1:NOx, Ch2:CO, Ch3:O_2, Ch4:corrected NOx, Ch5:corrected CO, Ch6:corrected NOx average, Ch7:corrected CO average
J	1 to 4	C	Ch1:CO_2, Ch2:CO, Ch3:O_2, Ch4:corrected CO, Ch5:corrected CO average
N	1 to 4	C *	Ch1:NOx, Ch2:SO_2, Ch3:CO, Ch4:O_2, Ch5:corrected NOx, Ch6:corrected SO_2, Ch7:corrected CO, Ch8:corrected NOx average, Ch9:corrected SO_2 average, Ch10:corrected CO average
V	1 to 4	C	Ch1:NOx, Ch2:SO_2, Ch3:CO_2, Ch4:CO, Ch5:O_2, Ch6:corrected NOx, Ch7:corrected SO_2, Ch8:corrected CO, Ch9:corrected NOx average, Ch10:corrected SO_2 average$_2$, Ch11:corrected CO average

* When the 21st digit code is A or C, the component of the NO analyzer is displayed as NOx.

DIMENSIONS (Unit : mm)

<TOP VIEW>

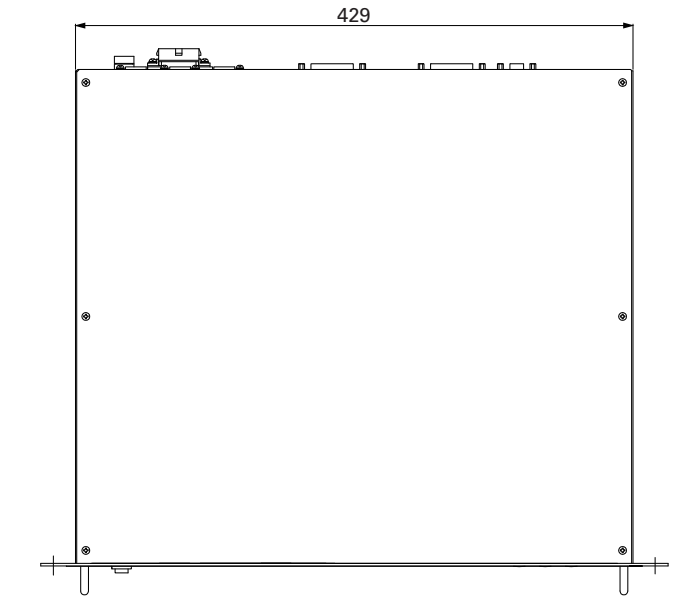

<FRONT VIEW>

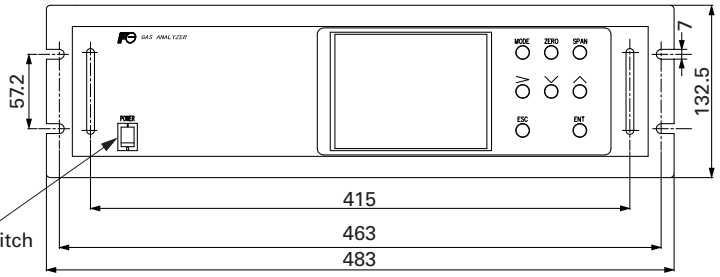

<REAR VIEW>

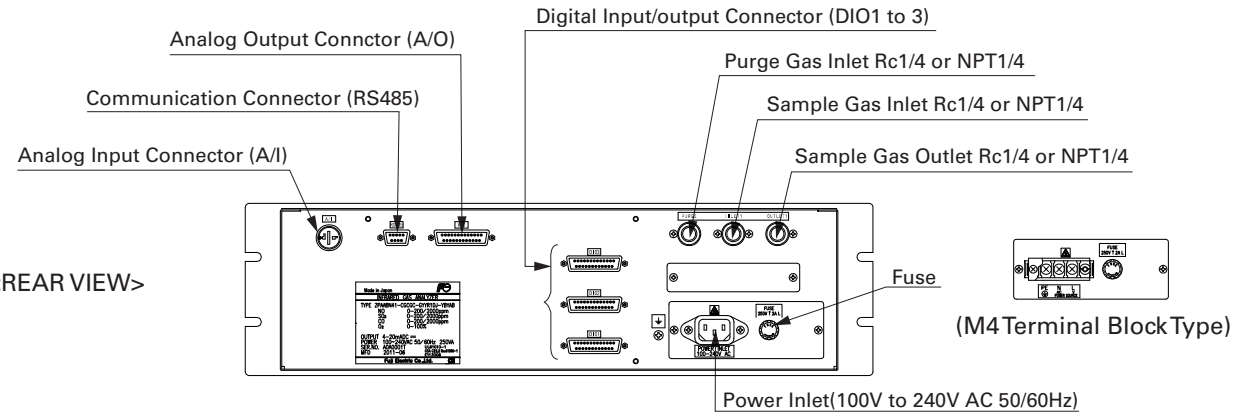

<SIDE VIEW>

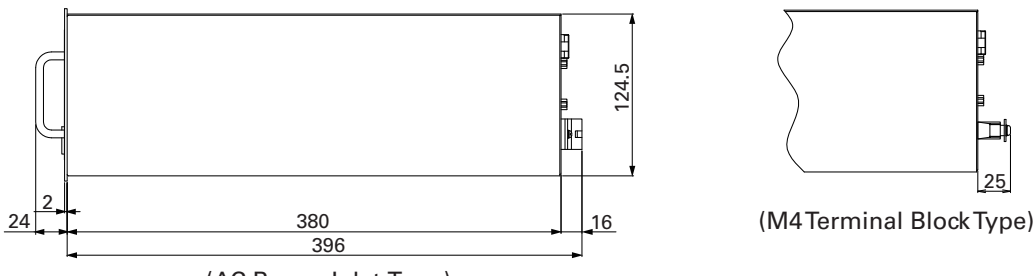

Mounting method

The analyzer weight should be supported at the bottom of the case.

19-inch rack mounting type

<Rack dimensions>

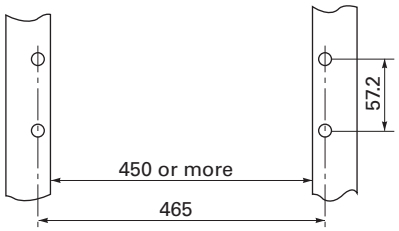

Mounting diagram

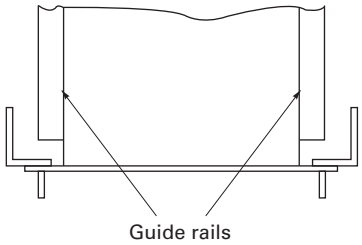

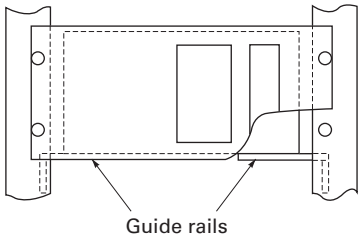

SCOPE OF DELIVERY

- Gas analyzer … 1 unit
- Replacement fuse (250V AC, 2A, delay type) … 2 pcs
- Instruction manual … 1 copy
- Connector for I/O connection … 1 set
- When the 4th code is "D": power supply cord (standard inlet type 2m) … 1 pc

ORDERING INFORMATION

1. Code symbols
2. Application and composition of sample gas

EXTERNAL CONNECTION

<Analog output> A/O connector

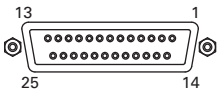

D-sub 25pins female

* In standard, displayed Channel No. and Analog Output No. are same.

<Screw terminal (M4)>

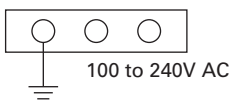

<Power inlet>

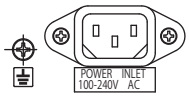

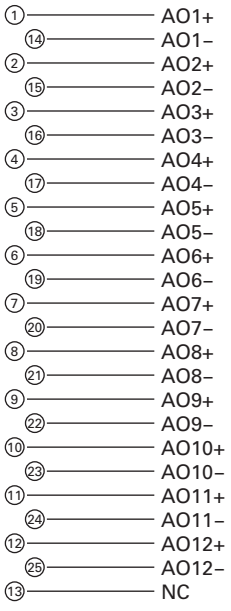

<RS485 communication signal>

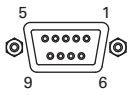

D-sub 9pins female

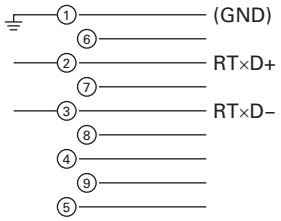

<Analog input> A/I connector (O_2 signal input)

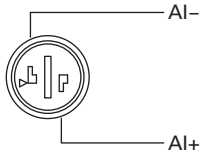

<Digital I/O> DIO 1 to 3 connector (option)

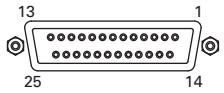

D-sub 25pins female

* DIO 1 to 3 are all same type of connector.

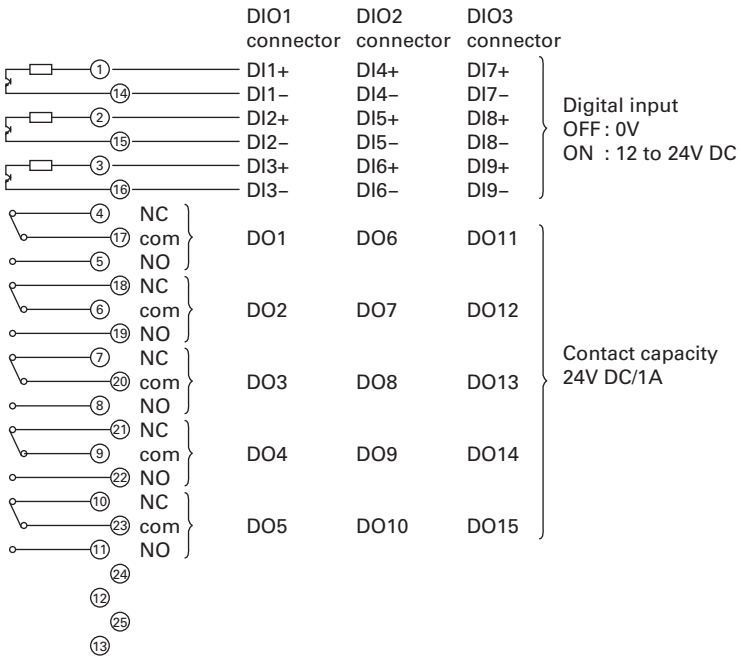

Contents of digital input signal

DI1	Remote hold
DI2	Average value reset
DI3	A. cal. start
DI4	A. zero. cal. start
DI5	Remote range Ch1
DI6	Remote range Ch2
DI7	Remote range Ch3
DI8	Remote range Ch4
DI9	Remote range Ch5

Allocation table of digital input signal

22th digit →	A	B	C	D	E	F	G	H	Y
DI1	○	○	○	○	○	○	○	○	
DI2	○	○	○	○	○	○	○	○	
DI3		○			○		○	○	
DI4		○			○		○	○	
DI5				○		○	○	○	
DI6				○*		○*	○*	○*	
DI7				○*		○*	○*	○*	
DI8				○*		○*	○*	○*	
DI9				○*		○*	○*	○*	

○ sign shows the function is valid.
* : The function might be invalid depending on the number of measurable components.
For example: DI5 corresponds to 1st component, DI6 corresponds to 2nd components.

Contents of digital output signal

	Independent on the number of component	1-component analyzer		2-component analyzer	3-component analyzer
22th digit →	A, C	B, E	D, F, G, H	B, D, E, F, G, H	B, D, E, F, G, H
DO1	Instrument error	Instrument error	Instrument error	Instrument error	Instrument error
DO2	Calibration error	Calibration error	Calibration error	Calibration error	Calibration error
DO3		A.cal.status	(A.cal.status)	(A.cal.status)	(A.cal.status)
DO4		For zero gas	(For zero gas)	(For zero gas)	(For zero gas)
DO5		For span gas Ch1	(For span gas Ch1)	(For span gas Ch1)	(For span gas Ch1)
DO6	(Alarm1)	(Alarm1)		(For span gas Ch2)	(For span gas Ch2)
DO7	(Alarm2)	(Alarm2)			(For span gas Ch3)
DO8	(Alarm3)	(Alarm3)			(Range identification Ch1)
DO9	(Alarm4)	(Alarm4)		(Range identification Ch1)	(Range identification Ch2)
DO10	(Alarm5)	(Alarm5)	Range identification Ch1	(Range identification Ch2)	(Range identification Ch3)
DO11			(Alarm1)	(Alarm1)	(Alarm1)
DO12			(Alarm2)	(Alarm2)	(Alarm2)
DO13			(Alarm3)	(Alarm3)	(Alarm3)
DO14			(Alarm4)	(Alarm4)	(Alarm4)
DO15			(Alarm5)	(Alarm5)	(Alarm5)

The items in the parentheses may not be available depending on the selected type on 22th digit.

The normal open side (NO) of digital output is close when the function is active without range ID.

In case of range ID, normal open (NO) side is close with First range.
The normal close (NC) side is close with Second range.

	4-component analyzer				5-component analyzer		
22th digit →	B, E	D, F	G	H	B, E	D, F	G
DO1	Instrument error	Instrument error	Instrument error	Instrument error	Instrument error	Instrument error	Instrument error
DO2	Calibration error	Calibration error	Calibration error	Calibration error	Calibration error	Calibration error	Calibration error
DO3	A.cal.status		A.cal.status	A.cal.status	A.cal.status		A.cal.status
DO4	For zero gas		For zero gas	For zero gas	For zero gas		For zero gas
DO5	For span gas Ch1		For span gas Ch1	For span gas Ch1	For span gas Ch1		For span gas Ch1
DO6	For span gas Ch2		For span gas Ch2	For span gas Ch2	For span gas Ch2	Range identification Ch1	For span gas Ch2
DO7	For span gas Ch3	Range identification Ch1	For span gas Ch3	For span gas Ch3	For span gas Ch3	Range identification Ch2	For span gas Ch3
DO8	For span gas Ch4	Range identification Ch2	For span gas Ch4	For span gas Ch4	For span gas Ch4	Range identification Ch3	For span gas Ch4
DO9		Range identification Ch3		Range identification Ch1	For span gas Ch5	Range identification Ch4	For span gas Ch5
DO10		Range identification Ch4		Range identification Ch2		Range identification Ch5	
DO11	(Alarm1)	(Alarm1)		(Alarm1)	(Alarm1)	(Alarm1)	Range identification Ch1
DO12	(Alarm2)	(Alarm2)	Range identification Ch1	(Alarm2)	(Alarm2)	(Alarm2)	Range identification Ch2
DO13	(Alarm3)	(Alarm3)	Range identification Ch2	(Alarm3)	(Alarm3)	(Alarm3)	Range identification Ch3
DO14	(Alarm4)	(Alarm4)	Range identification Ch3	Range identification Ch3	(Alarm4)	(Alarm4)	Range identification Ch4
DO15	(Alarm5)	(Alarm5)	Range identification Ch4	Range identification Ch4	(Alarm5)	(Alarm5)	Range identification Ch5

Zirconia O_2 analyzer (to be purchased separately)

Measuring method:
Zirconia system

Measurable component and measuring range:

Measurable component		Range
O2	Oxygen	0 to 25vol%

Repeatability: Within ± 0.5% of full scale
Linearity: Within ± 1% of full scale
Zero drift: Within ± 1% of full scale/week
Span drift: Within ± 2% of full scale/week
Response time: Approx. 20 seconds (for 90% response)
Measured gas flow rate:
0.5 ± 0.25L / min

Notes:
- If process gas is combustible, measurement error may occur due to oxygen contained in the process gas.
- If process gas is corrosive (for example, SO_2 beyond 250 ppm range), the service life of zirconia sensor may be shortened.

Gas inlet/outlet size:
Rc1/4 or NPT1/4

Power supply:
Rated voltage; 100 to 115V AC or 200 to 240V AC
Rated frequency; 50Hz/60Hz
Max. rated power; 215VA (at start up)
65VA (during normal operation)

Enclosure: Steel casing, for indoor application
Indication: Temperature indication (LED)
Temperature alarm output:
Contact output 1 from A contact,
Contact capacity 220V AC, 1A (resistive load)
Outer dimensions (H x W x D):
141 x 170 x 190mm
Weight: Approx. 3kg
Finish color: Munsell 5Y 7/1

CODE SYMBOLS

1	2	3	4	5	6	7	8		9	10	11	12	13	Description
Z	F	K	7	Y	Y		4	-		Y	0	Y	Y	
			7	Y	Y									Measuring method Zirconia method
						9								Power supply 100 to 115V AC 50/60Hz(Standard)
						B								200 to 240V AC 50/60Hz(Standard)
						C								200 to 240V AC 50/60Hz(CE mark)
									1					Gas inlet/outlet size Rc 1/4
									8					NPT 1/4

DIMENSIONS (Unit: mm)

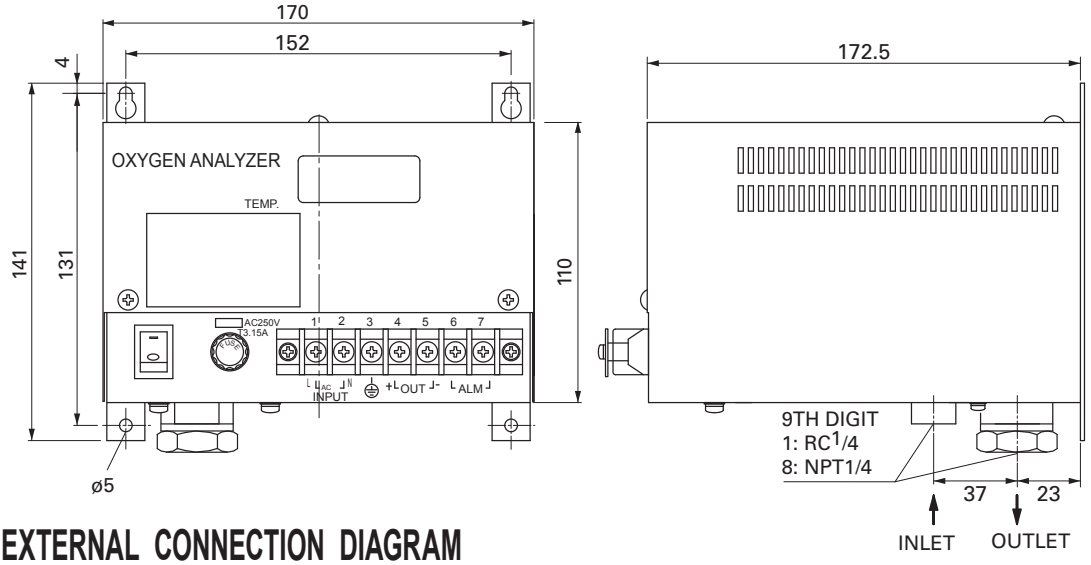

EXTERNAL CONNECTION DIAGRAM

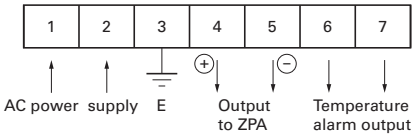

Information in this catalog is subject to change without notice.
Read the instruction manuals thoroughly before using the products.

Fuji Electric Co., Ltd.

Gate City Ohsaki, East Tower, 11-2, Osaki 1-chome, Shinagawa-ku, Tokyo 141-0032, Japan
Phone: +81-3-5435-7111
www.fujielectric.com
www.fujielectric.com/products/instruments/

Printed in Japan